G-1811-C14

Sade Collection
Widespread Lavatory Faucet

Product Features

- Installs on 8" centers
- Aerated flow rate ≤ 1.2 max gpm
- 1" hole cutout for spout
- 1-1/2" (x2) hole cutout for handles
- 7-1/2" spout reach
- 13-7/8" spout height
- Includes push-top umbrella pop-up drain with overflow
- Rough valve included with handles

Optional Accessories

- Matching decorative trap
  G-9971

Available Finishes

- Polished Chrome
  G-1811-C14-PC
- Polished Nickel
  G-1811-C14-PN
- Unfinished Brass*
  G-1811-C14-UB*
- Olive Bronze
  G-1811-C14-OB
- Steelnox
  G-1811-C14-SN
- Gold*
  G-1811-C14-AU*
- Brushed Gold*
  G-1811-C14-BAU*

* Special order finish- call for availability

Code Compliance

- *CAL*Green

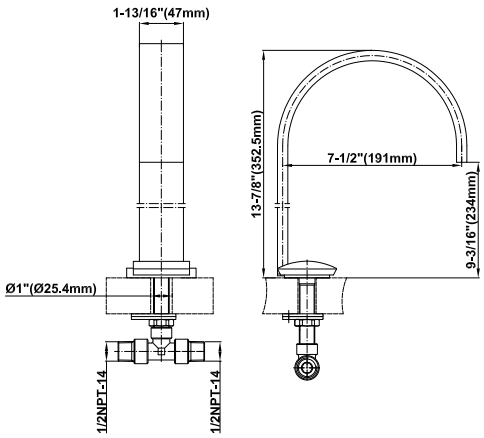

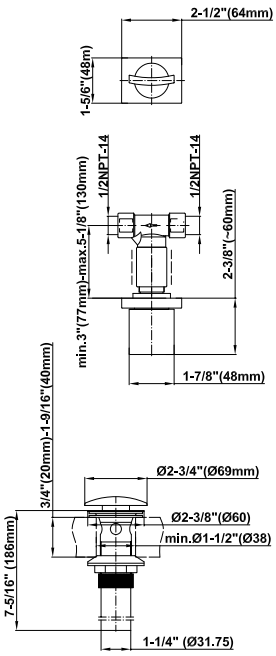

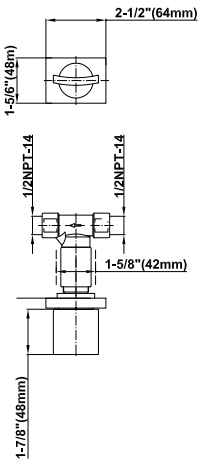

Warranty

- Limited lifetime warranty

For complete warranty information go to www.graff-designs.com/en-nam/warranty

The measurements shown are for reference only. Products and specifications shown are subject to change without notice. Revised 11/2017

www.graff-designs.com | phone: 800-954-4723